High Temperature Inverter Heat Pumps

This Series units use natural refrigerant R290 (GWP=3) that offers many advantages over refrigerants traditionally used in heat pumps. With improved efficiency, as well as higher flow temperatures (70 degrees), is perfect for new and existing heating systems (including hybrid).
Energy efficiency class of A+++ reduce the energy consumption of the outdoor unit. Using smart grids (SG ready), you can also take advantage of variable electricity prices and make additional savings.
Works all the way down to minus 25 degrees, so you are guaranteed good and stable heat, even on the coldest days of the year.
Frequency controlled: The heat pump can run with different services. When the desired temperature is achieved, running it with a lower one; frequency/performance to reduce energy consumption.
With DC Inverter brushless fan motor that can be controlled so that the sound from the device reaches a satisfactory low level.
Intelligent defrosting technology that minimizes energy consumption.

Federal Office for Economic Affairs and Export Control
BAFA listed

R290 Units Advantage

R290 is a natural refrigerant with a very low GWP. Its advantages comparing with R32 and R410A:

Refrigerant	GWP
R290	3
R32	675
R410A	2088

- **Future-proof, as not affected by the F-Gas Regulation**
- **Higher flow temperature of up to 70 degree.**
- **Higher hot water comfort and protection against legionella without electric heater**
- **Wider performance envelope with operating temperature ranging between -25°C and +46°C**
- **Reduced refrigerant charge compared to R410a and R32**

Typical application

With Hydraulic Tower

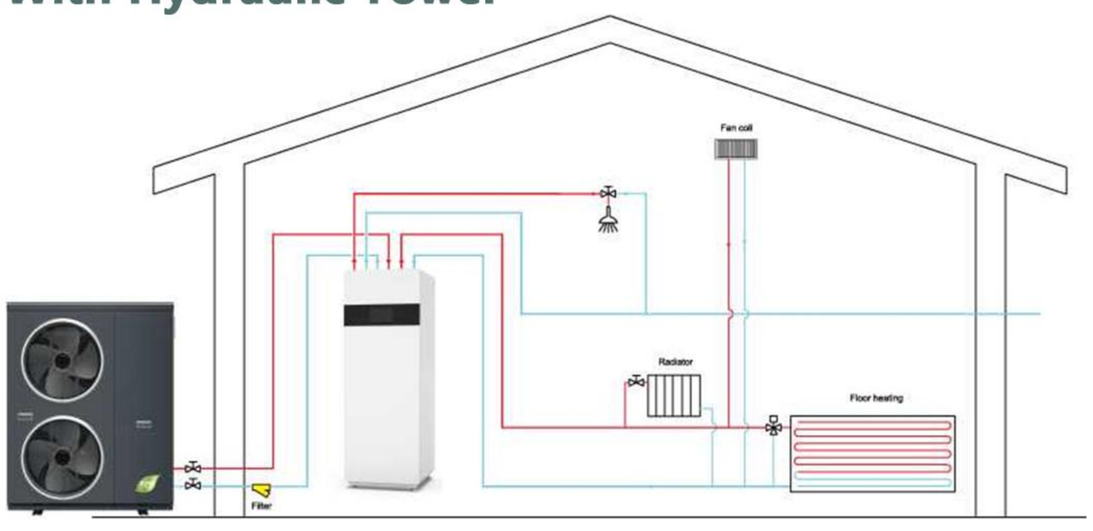

With Hydraulic Station

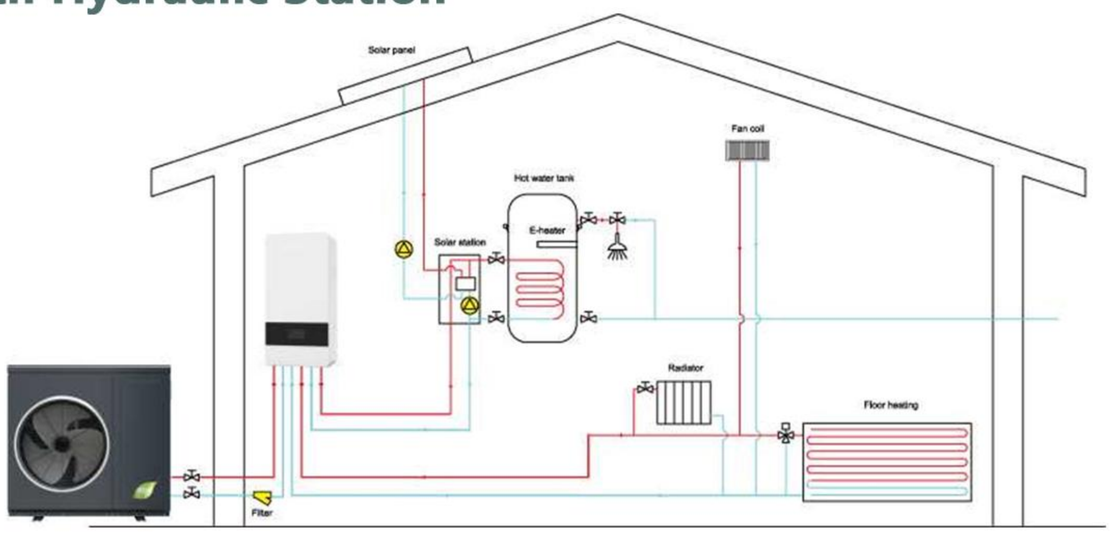

Wifi App. and Web platform

Control your heat pump with your smart phone anywhere, anytime

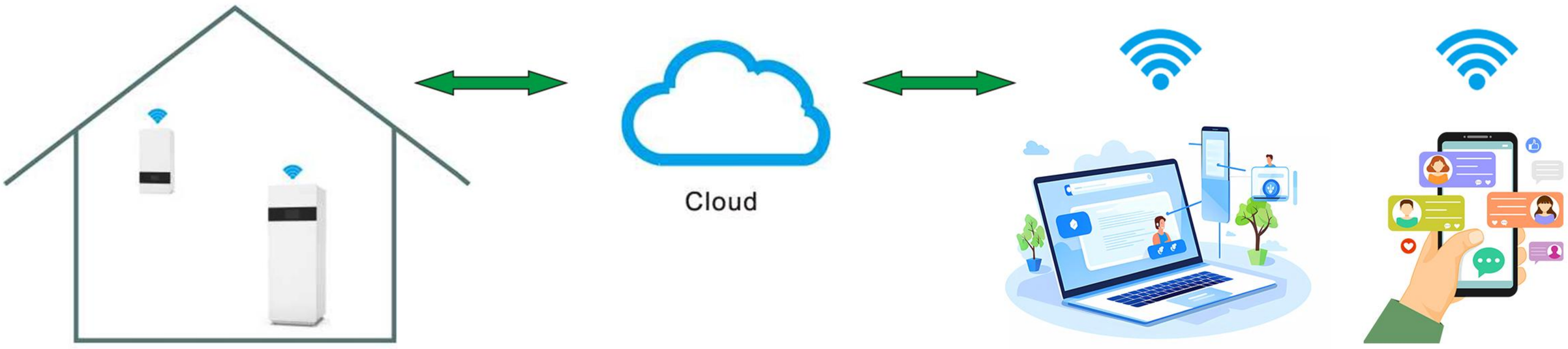

Unit App. control function:

- Unit on/off control
- Energy monitor
- Heating/coolling mode change
- Heating/cooling/domestic hot water temp, setup
- Weather compensation function enable/disable
- Back-up heater setup
- Heating/cooling schedule on/off
- Fault alert

Computer web monitoring system:

- Unit running monitoring
- Running data record and trend
- Alarm and fault alart
- Fault analysis

Main Components

Hydraulic Station

1. 18L buffer tank
2. Back-up electric heater
3. 8L expansion tank
4. Three way valve
5. Primary pump
6. Secondary pump

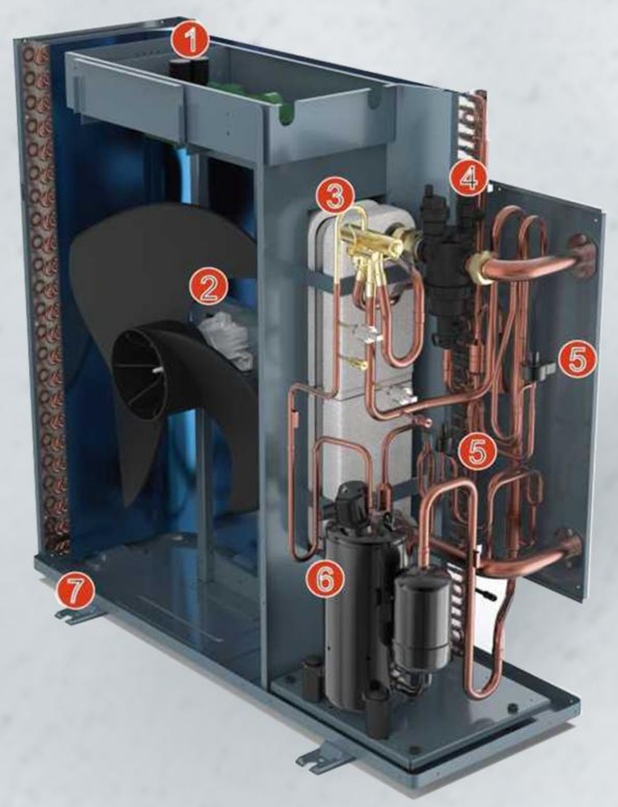

Oudoor unit

1. Inverter / control board
2. DC fan motor
3. Plate heat exchanger
4. Magnetic Air and dirt separator
5. Heating/cooling separate EEV
6. Dual rotary compressor
7. Integration tray and tray heater

Hydraulic Tower

1. 8L expansion tank
2. 26L buffer tank
3. Back-up heater
4. Primary pump
5. Secondary pump
6. 3 way valve
7. 200L DHW tank

Data Sheet

Model Number		HS06V-Q	HS08V-Q	HS10V-Q	HS12V-Q	HS12V-D	HS15V-Q	HS15V-D
Rated heat output at A7/W35℃	kW	5.6	6.9	7.2	8.6	8.6	12.8	12.8
Rated Power consumption A7/W35℃	kW	1.1	1.4	1.5	1.8	1.8	2.6	2.6
Rated COP at A7/W35℃		5.1	4.9	4.8	4.8	4.8	4.9	4.9
Heat output range A7/35℃		2.1 ~ 6.5	2.8 ~ 8.5	2.9 ~ 9.5	3.8~ 12.2	3.8 ~ 12.2	4.9~ 15.2	4.9~ 15.2
Heat output at A2/W35℃	kW	5.1	6.6	7.0	8.4	8.4	12.3	12.3
Power consumption A2/W35℃	kW	1.2	1.6	1.7	2.1	2.1	3.1	3.1
COP at A2/W35℃		4.3	4.1	4.1	4.0	4.0	4.0	4.0
Heat output at A-7/W35℃	kW	4.9	6.3	6.7	8.2	8.2	11.6	11.6
Power consumption A-7/W35℃	kW	1.3	1.8	2.0	2.5	2.5	3.3	3.3
COP at A-7/W35℃		3.7	3.5	3.4	3.3	3.3	3.5	3.5
Rated heat output at A7/W55℃	kW	4.7	5.5	6.8	8.3	8.3	11.8	11.8
Rated power consumption at A7/W55℃	kW	1.5	1.8	2.3	2.7	2.7	3.9	3.9
Rated COP at A7/W55℃		3.1	3.1	3.0	3.1	3.1	3.0	3.0
Heat output range A7/55℃		1.82 ~ 5.8	2.47 ~ 6.6	2.57 ~ 7.6	3.48 ~ 11.0	3.48 ~ 11.0	4.65 ~ 14.3	4.65 ~ 14.3
Heat output at A-7/W55℃	kW	4.3	5.9	6.2	7.8	7.8	10.8	10.8
Power consumption at A-7/W55℃	kW	1.6	2.1	2.6	3.1	3.1	4.3	4.3
COP at A-7/W55℃		2.7	2.8	2.4	2.5	2.5	2.5	2.5
Rated cool output at A35/W7℃	kW	4.3	5.2	6.0	7.8	7.8	10.3	10.3
Rated power consumption at A35/W7℃	kW	1.5	1.8	2.3	2.8	2.8	4.5	4.5
Rated EER at A35/W7℃		2.9	2.9	2.6	2.8	2.8	2.3	2.3
Cool output range A35/W7℃	KW	1.5 ~ 4.3	1.8 ~ 5.2	1.9 ~ 5.9	2.7 ~ 7.8	2.7 ~ 7.8	3.6 ~ 10.3	3.6 ~ 10.3
Rated cool output at A35/W18℃	kW	5.2	6.2	7.1	10.6	10.6	14.7	14.7
Rated power consumption at A35/W18℃	kW	1.6	1.9	2.4	3.3	3.3	4.3	4.3
Rated EER at A35/W18℃		3.3	3.3	3.0	3.2	3.2	3.4	3.4
Cool output range A35/18℃	KW	1.8 ~ 5.2	2.22 ~ 6.2	2.29 ~ 7.1	3.87 ~ 10.6	3.87 ~ 10.6	5.45 ~ 14.7	5.45 ~ 14.7
Max operating current	A	9	12	14	18	9	25	11.5
Power Supply		230V/50Hz				400V/3N~/50Hz	230V/50Hz	400V/3N~/50Hz
Compressor		TWIN ROTARY						
Max. running current	A	11.8	13.8	17.5	19.3	10.5	32	16.3
Max. power consumption	KW	2.5	3.2	3.5	4.5	4.5	7.1	7.1
Condenser		Plate heat exchanger						
Nominal flow heating medium	m3/h	0.8~1.3	0.9~1.8	0.9~1.8	1.5~3.2	1.5~3.2	1.5~3.2	1.5~3.2
Internal pressure drop at nominal flow	kPa	16	21	23	25	25	25	25
Min. flow (defrosting)	m3/h	0.5	0.5	0.5	1.0	1.0	1.0	1.0
Nominal air flow	m^3/h	2700	2900	3000	3350	3350	5500	5500
Nominal fan output	W	70	70	75	80	80	150	150
Max outlet heating mediumtemperature	℃	70						
Refrigerant R290 filling weight	kg	0.6	0.72	0.72	0.80	0.80	1.15	1.15
GWP R290		3						
CO2 equivalent		0.0018	0.0022	0.0022	0.0024	0.0024	0.0035	0.0035
Dimensions (HxWxD)	mm	850×1060×420	1014×1060×420				1370×1060×420	
Pipe connector		G1"						
Net Weight	kg	92	106	106	112	112	132	132
ErP Level (35℃)		A+++	A+++	A+++	A+++	A+++	A+++	A+++
ErP Level (55℃)		A++	A++	A++	A++	A++	A++	A++
Energy efficiency ns (35℃)		196%	189%	188%	189%	189%	194%	194%
Rated heat output Prated (35℃)		4.3	6.0	6.4	7.4	7.4	11.4	11.4
SCOP (35℃)		5.0	4.8	4.9	4.8	4.8	4.9	4.9
Energy efficiency ns (55℃)		137%	133%	133%	130%	130%	140%	140%
Rated heat output Prated (55℃)		4.1	5.8	6.2	7.6	7.6	11.0	11.0
SCOP (55℃)		3.5	3.4	3.4	3.3	3.3	3.6	3.6
Operating ambient temp. range	°C	Heating: -25~46						
		DHW: -25~46						
		Cooling:10~45						
Sound power level L_{WA} (ErP)	dB(A)	57	59	64	60	60	58	58

The above data is tested by EN14511. A7/W35 °C means air temp. 7 °C .outlet water temp .35 °C

The Sound power level is tested by EN12102

Data Sheet

Hydraulic Station

model	DSK03-QPVTSG	DSK09-QPVTSG
power supply	230V/50Hz	400V/3N~/50Hz
buffer tank	18L	18L
expansion tank	8L	8L
primary pump	standard delivery	standard delivery
secondary pump	standard delivery	standard delivery
3 way valve	standard delivery	standard delivery
heating aux. heater	3kW	9kW
wifi module	standard delivery	standard delivery
touch screen	6"	6"
heating water connection	G1″	G1″
DHW connection	G1″	G1″
dimension WXDXH	450×360×950	450×360×950

Hydraulic Tower

model	DSK03-QPVTSL200	DSK09-QPVTSL200
power supply	230V/50Hz	400V/3N~/50Hz
DHW tank	200L	200L
buffer tank	26L	26L
expansion tank	8L	8L
primary pump	standard delivery	standard delivery
secondary pump	standard delivery	standard delivery
3 way valve	standard delivery	standard delivery
heating aux. heater	3kW	9kW
wifi module	standard delivery	standard delivery
touch screen	6"	6"
heating water connection	G1″	G1″
DHW connection	G3/4″	G3/4″
dimension WXDXH	665×655×1870	665×655×1870

Workable Range

Heating mode

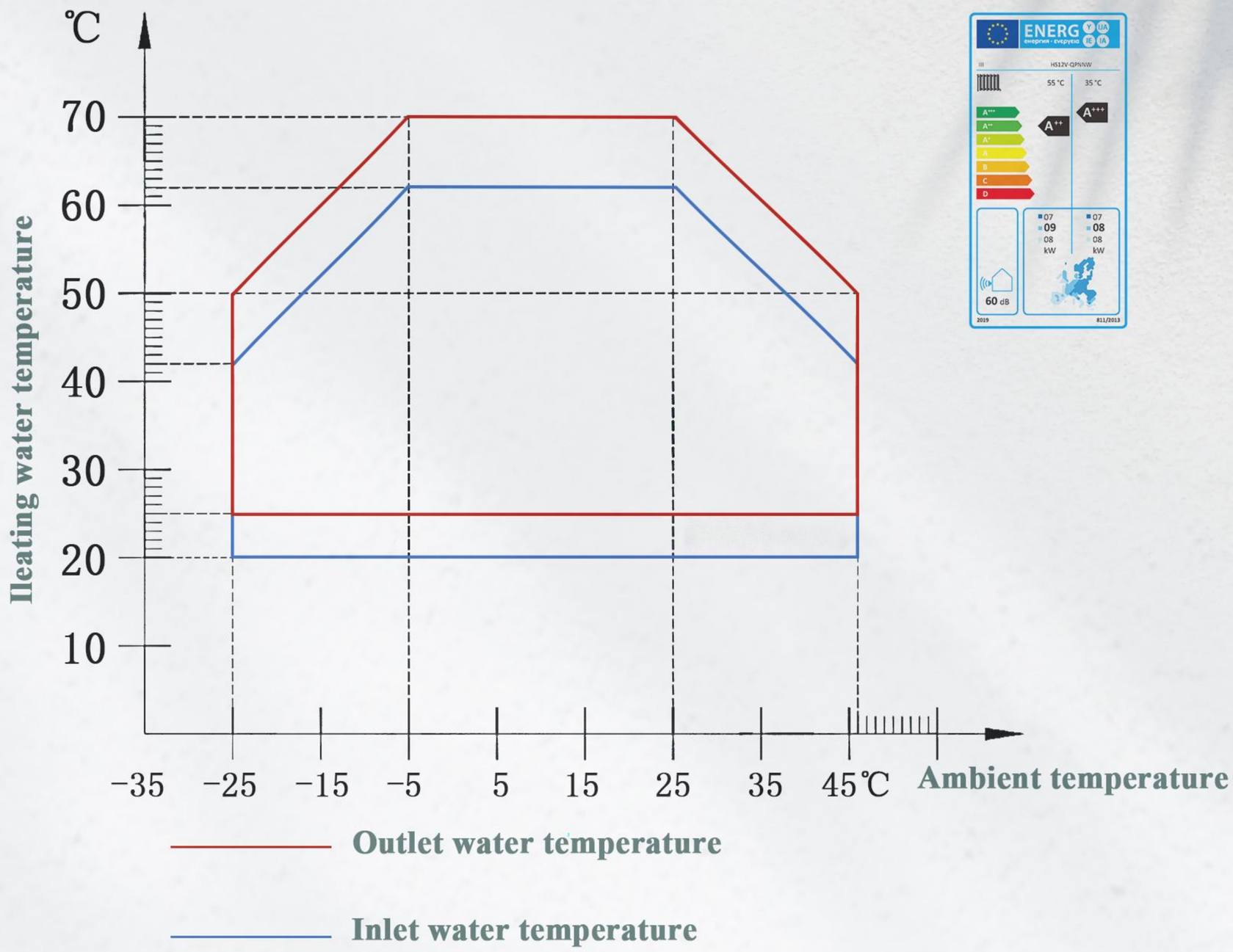

Cooling mode

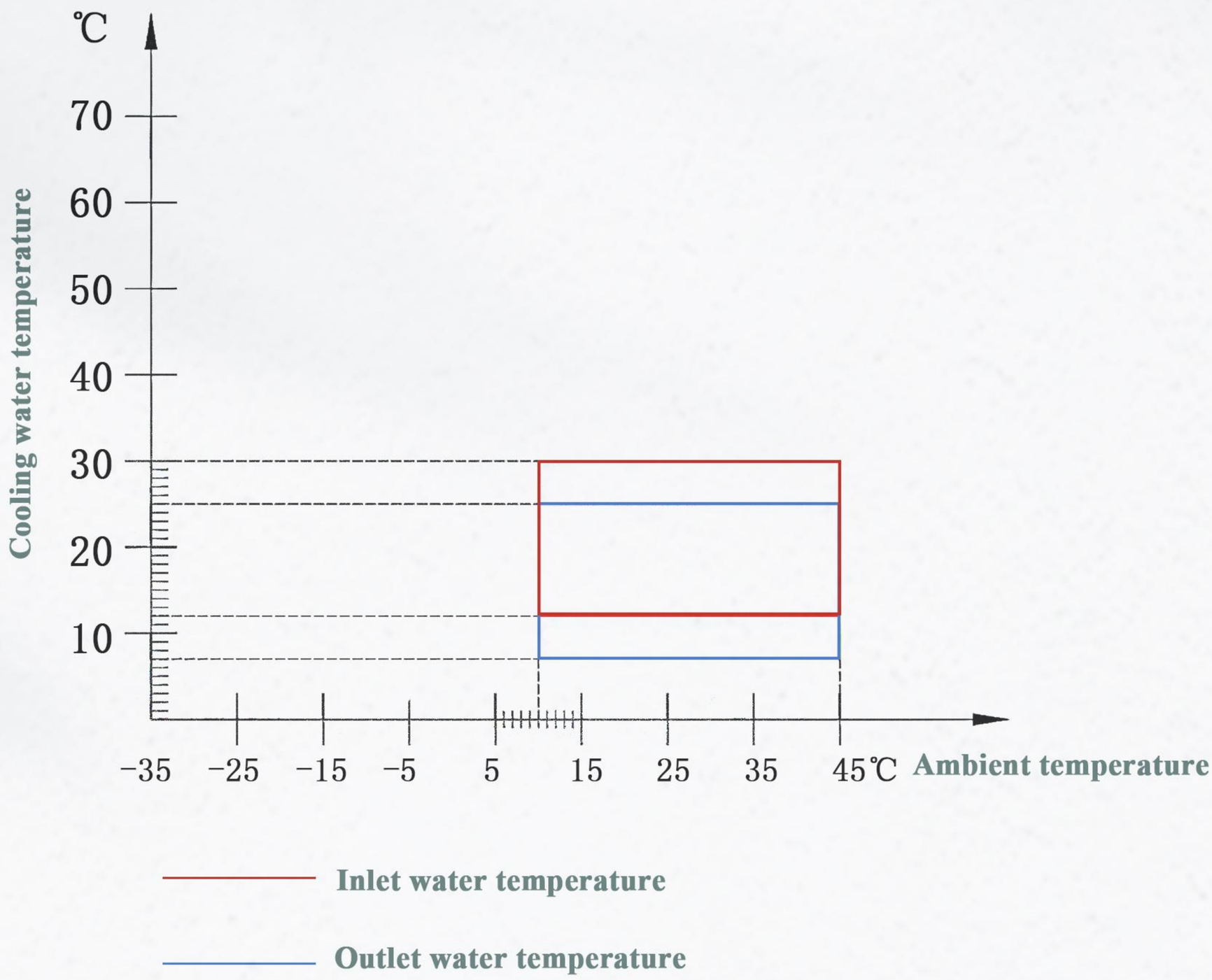

Internal Primary And Secondary Pump Data

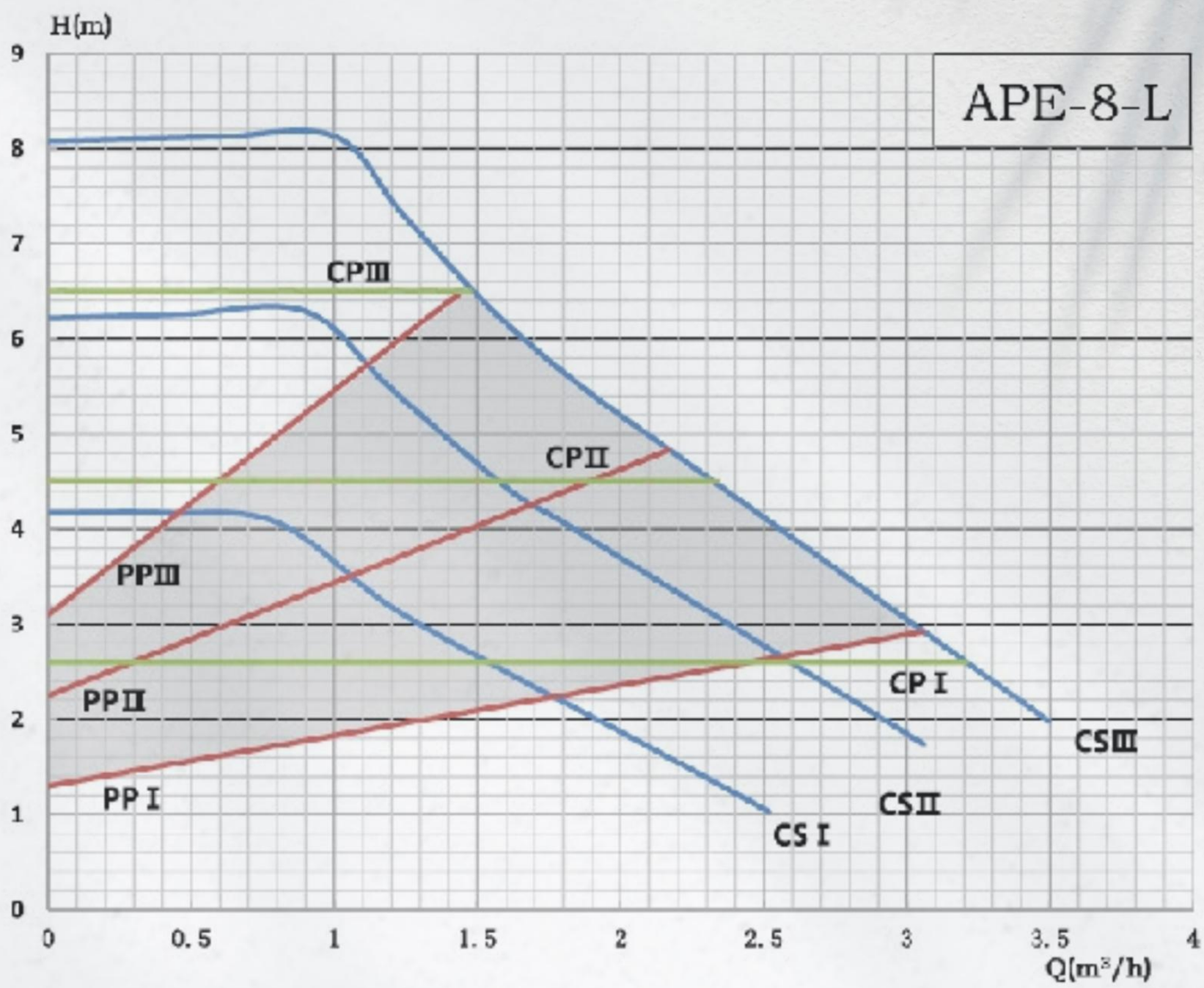

Dimension

Hydraulic Tower

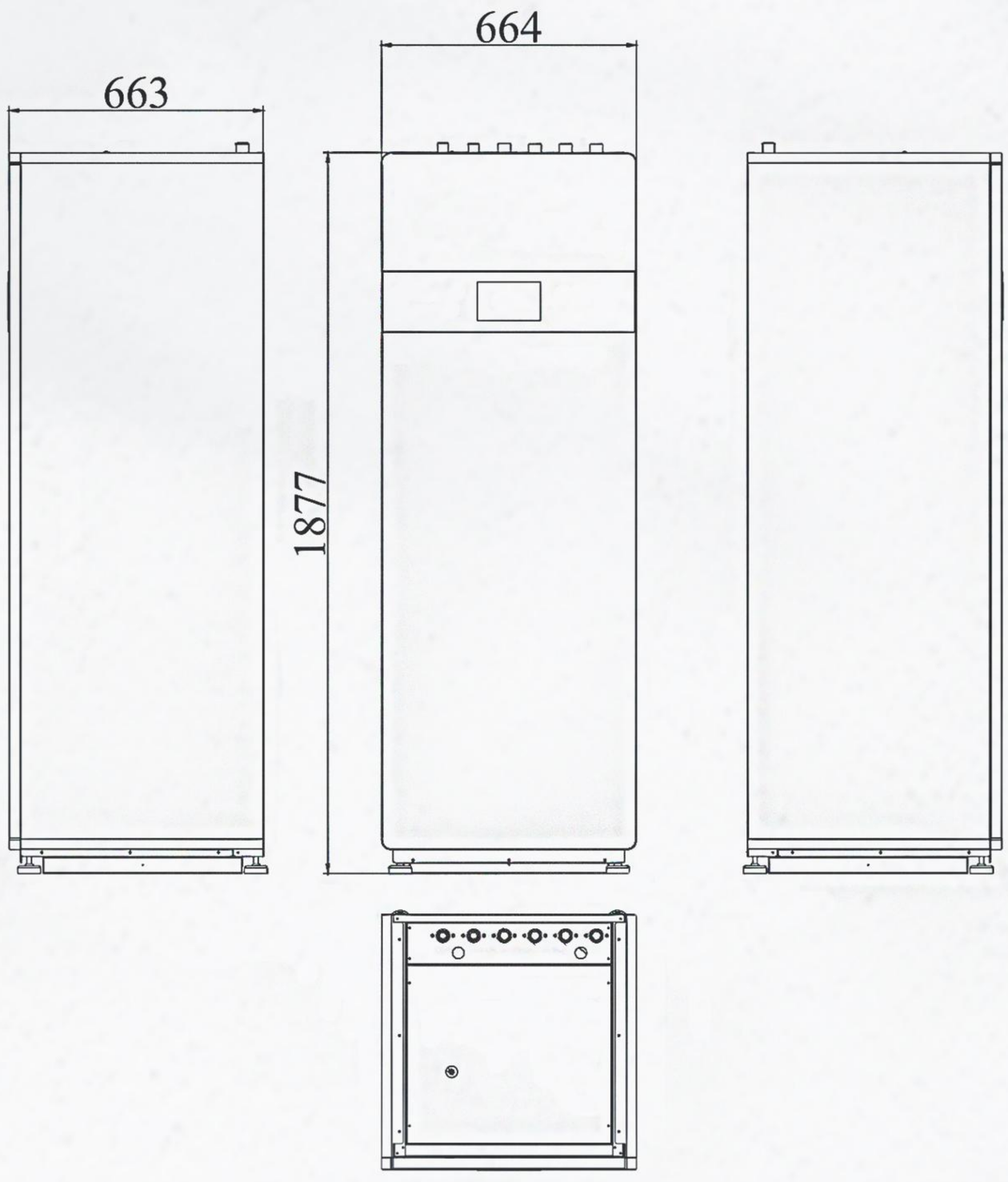

Dimension

HS06V

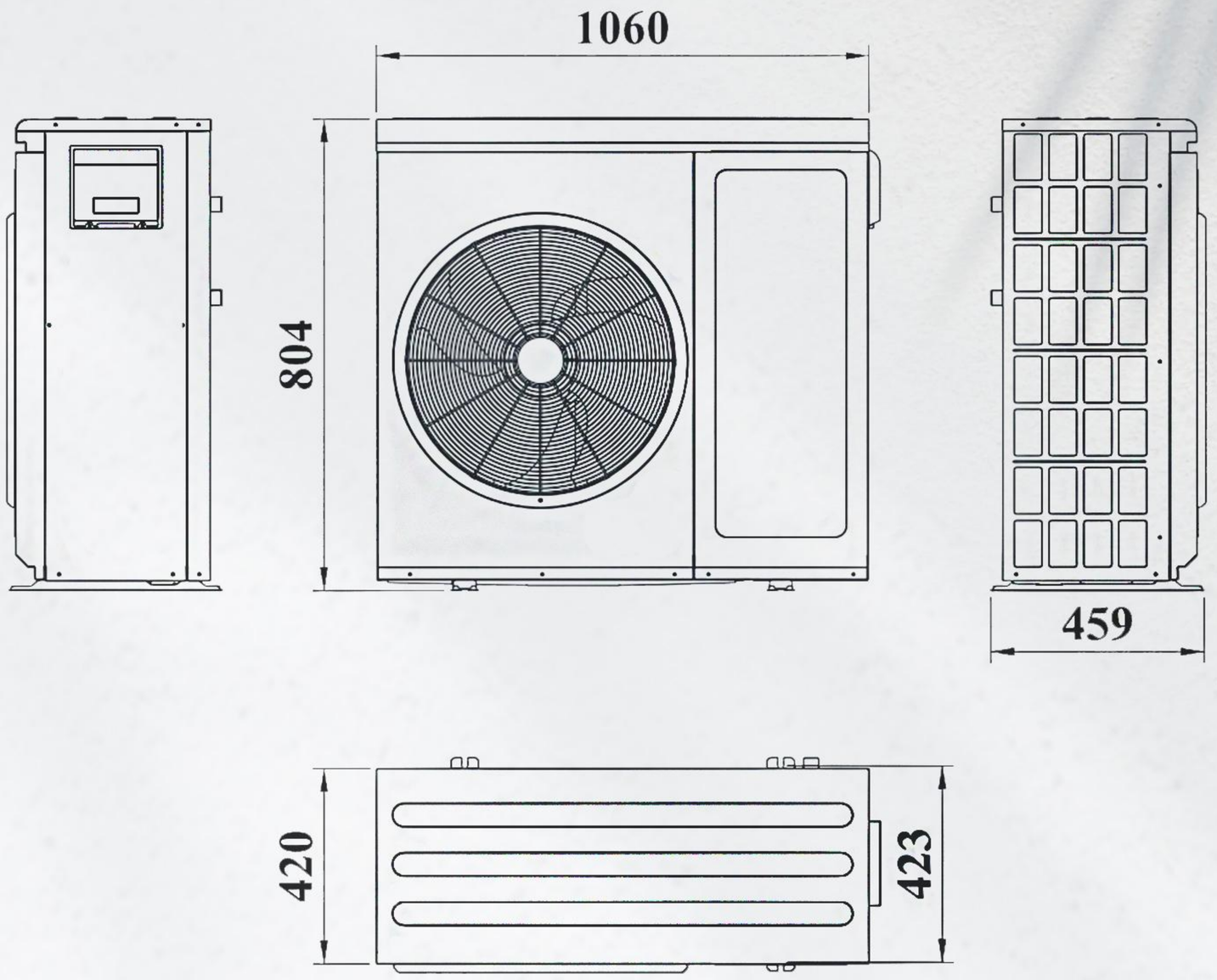

HS08V HS10V HS12V

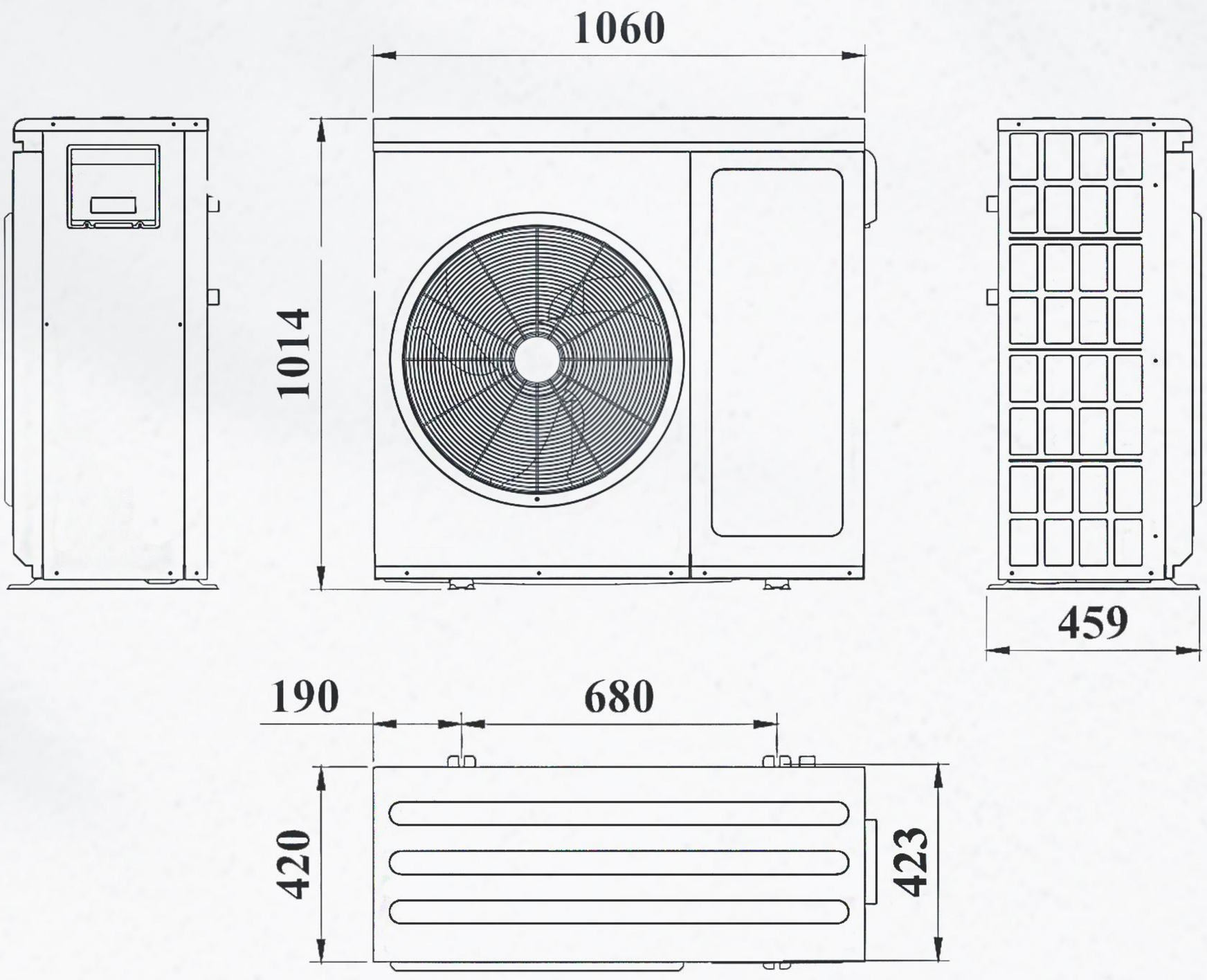

Dimension

HS15V

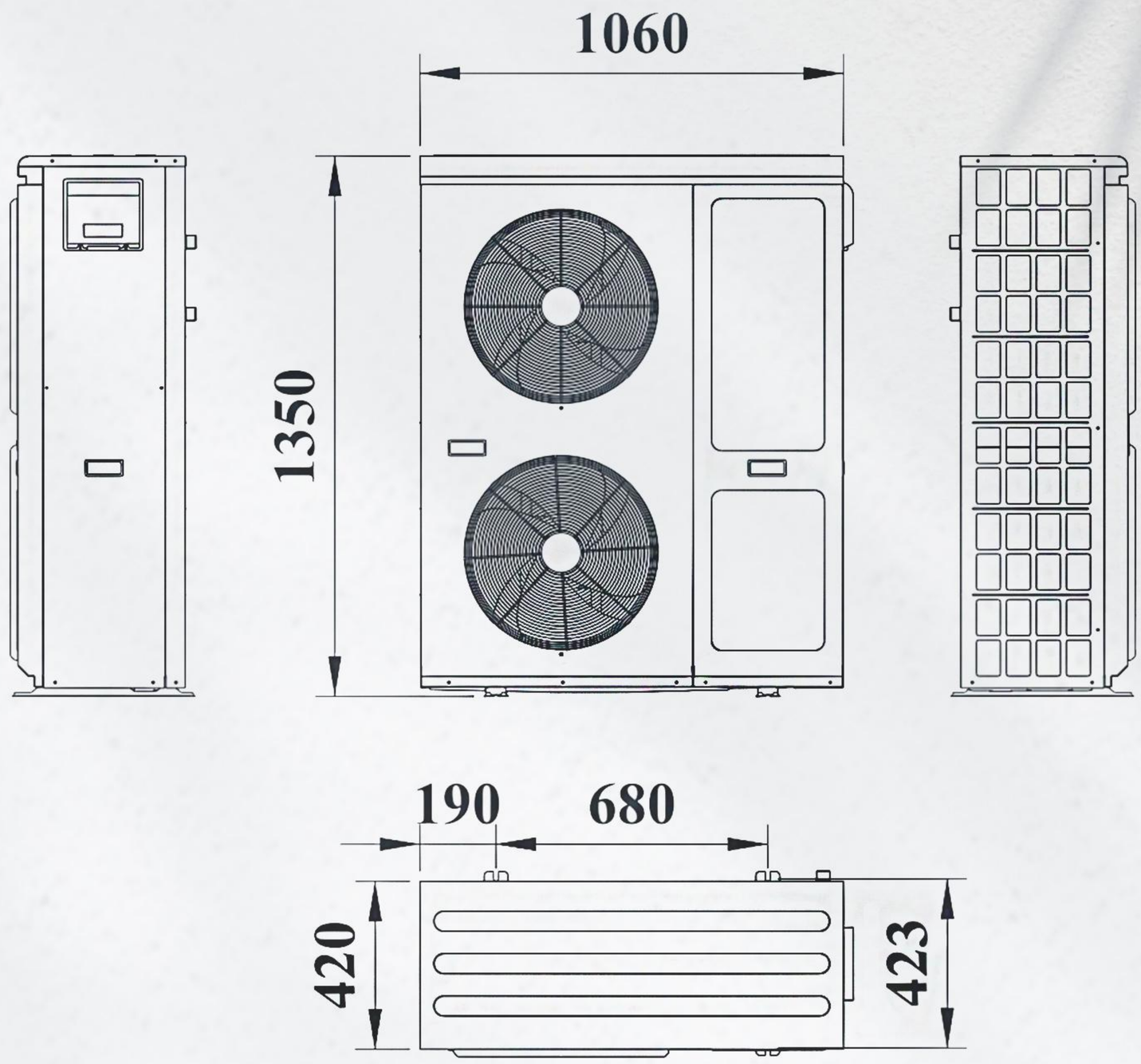
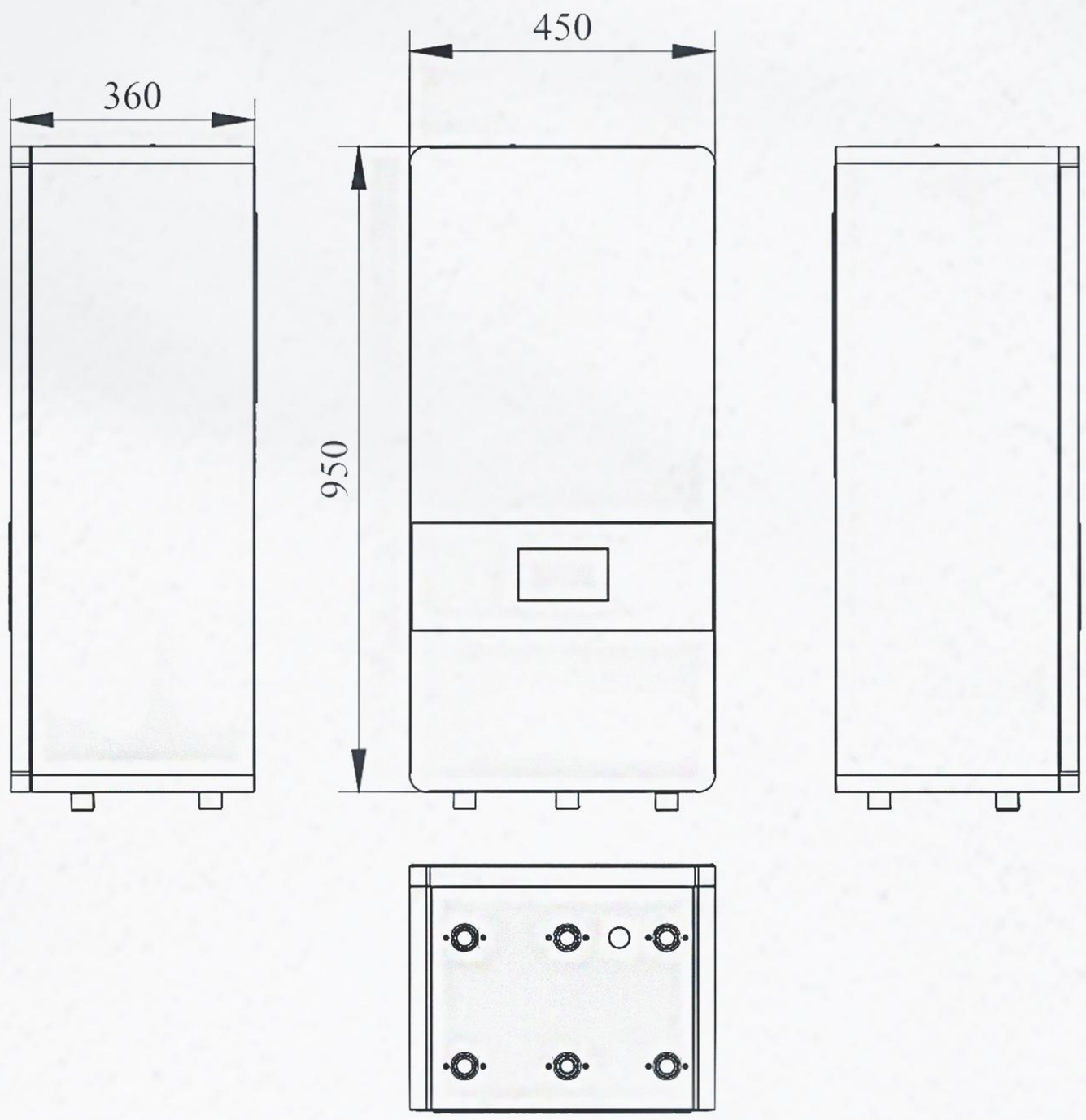
Hydraulic Station